通化師範學院

TONGHUA NORMAL UNIVERSITY

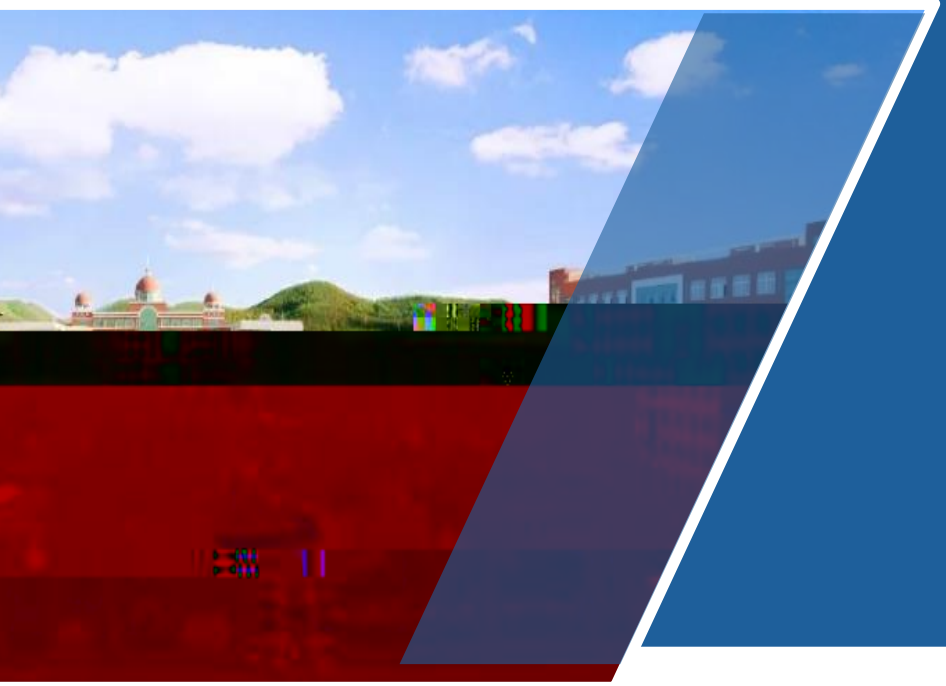

2023 9

1. 2020 1
2. 2020 13
3. 2022 23
4. 2020 38
5. **2020** 47
6. 2020 60
7. 2020 74
8.

2020

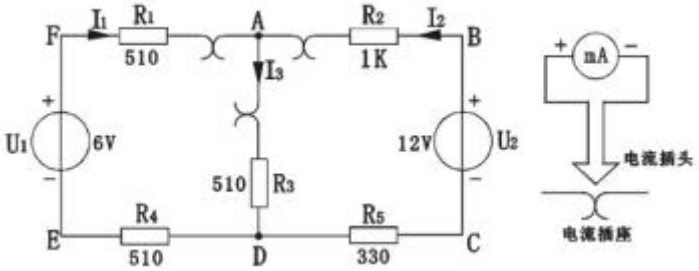
F
I1
R1
510
A
R2
I2
B
1K
I3
+
U1
6V
−
510
R3
+
12V
U2
−
E
R4
510
D
R5
330
C
+
mA
−
电流插头
电流插座

	I_1	I_2	I_3	U_1	U_2	U_{FA}	U_{AB}	U_{AD}	U_{CD}	U_{DE}

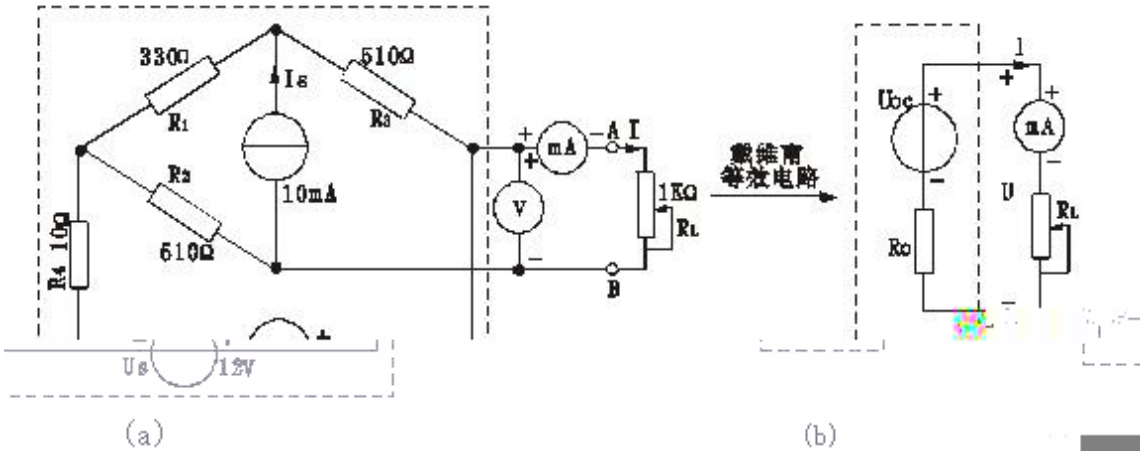

U_c V	I_c(A)	$R_0 = \frac{U_c}{I_c}$

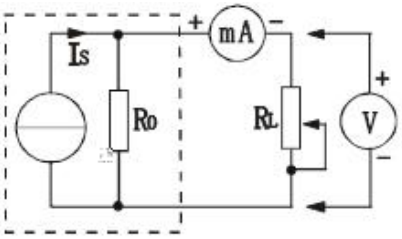
Is
Ro
mA
RL
V

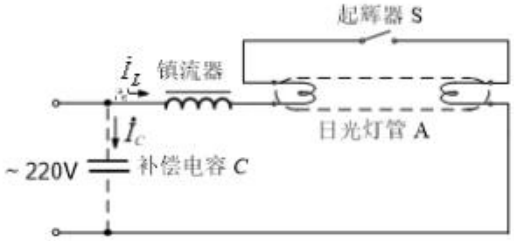
起辉器 S
镇流器
日光灯管 A
~ 220V
补偿电容 C

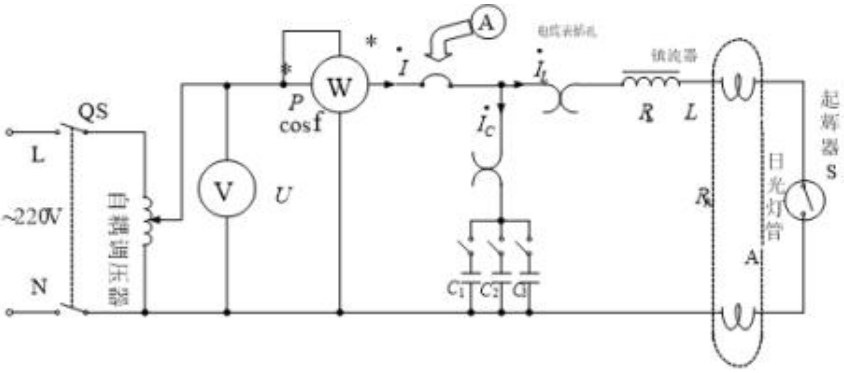
QS
L
~220V
N
自耦调压器
V
U
W
P
cosf
A
镇流器
R
L
日光灯管
起辉器
S

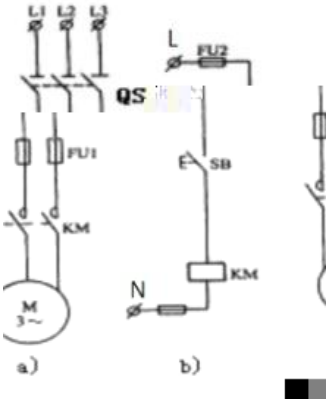
L1 L2 L3
QS
FU1
KM
M
3~
a)
L
FU2
SB
KM
N
b)

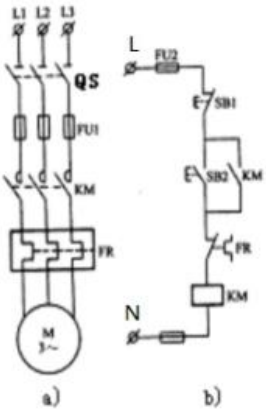
L1 L2 L3
QS
FU1
KM
FR
M
3~
a)
L
FU2
SB1
SB2
KM
FR
KM
N
b)

2020

	3.1	1 2	H
	6.2[ ]	1 3	M
	7.2[ ]	4	M

				4	
				4	
				4	
				4	

2022

		1 2	
		1	
		2	

~ nW 7>$YS/,ãä±• bl<ypÒÏÄ° –• `:

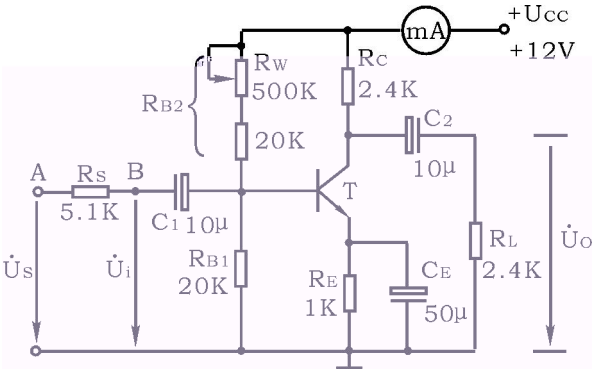
+Ucc
+12V
mA
RW
500K
RC
2.4K
RB2
20K
C2
10μ
A
RS
B
5.1K
C1 10μ
T
RL
2.4K
U̇O
U̇S
U̇i
RB1
20K
RE
1K
CE
50μ

≈

10 F

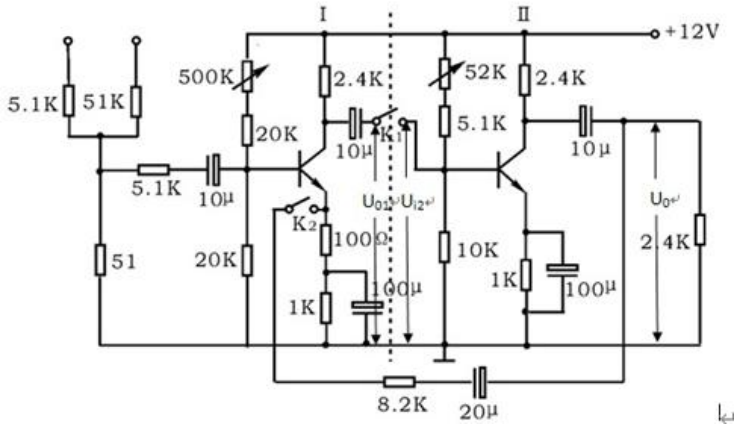

I
II
+12V
5.1K
51K
500K
2.4K
52K
2.4K
20K
10μ
K1
5.1K
10μ
5.1K
10μ
U01
Ui2
U0
K2
100Ω
10K
2.4K
51
20K
1K
100μ
1K
100μ
8.2K
20μ

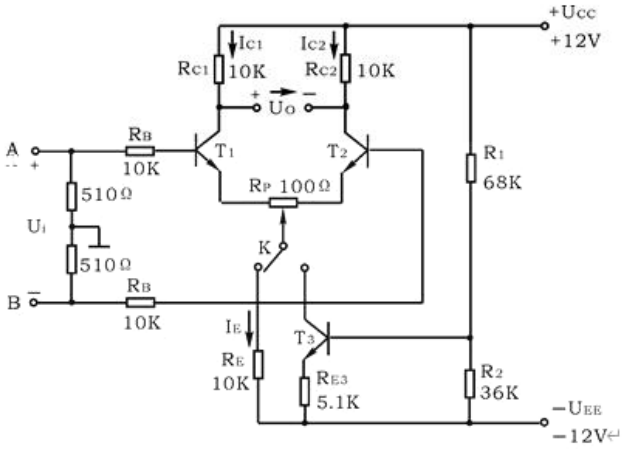
+Ucc
+12V
Ic1
Ic2
Rc1
10K
Rc2
10K
+
Uo
−
A
RB
10K
T1
T2
R1
68K
510Ω
RP 100Ω
Ui
K
510Ω
B
RB
10K
IE
T3
RE
10K
RE3
5.1K
R2
36K
−UEE
−12V

od_1 od_2 od

oc_1 oc_2 oc

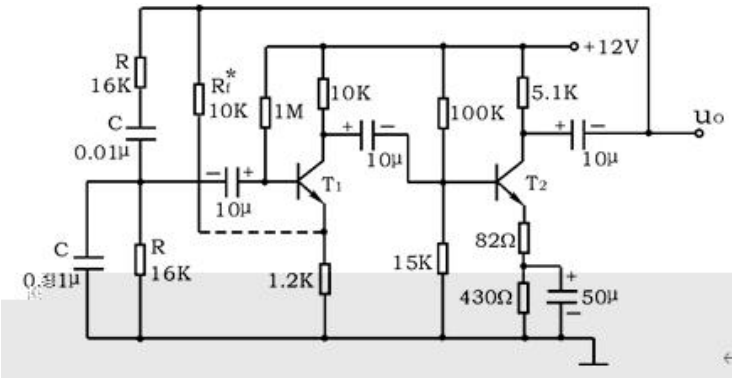
+12V
R
16K
C
0.01μ
R_f^*
10K
1M
10K
10μ
100K
5.1K
10μ
uo
10μ
T1
T2
C
0.01μ
R
16K
1.2K
15K
82Ω
430Ω
50μ

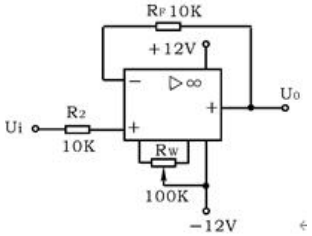
RF 10K
+12V
Ui
R2
10K
Rw
100K
−12V
U0

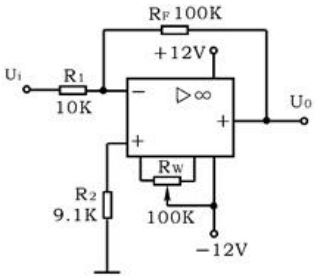
RF 100K
+12V
Ui
R1
10K
U0
Rw
R2
9.1K
100K
−12V

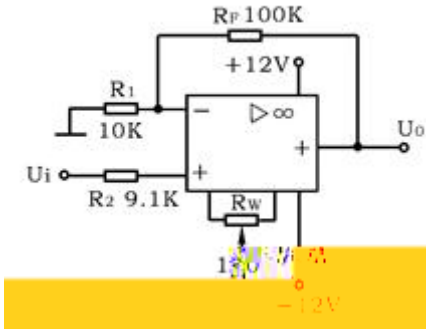
RF 100K
+12V
R1
10K
Ui
R2 9.1K
RW
Uo
−12V

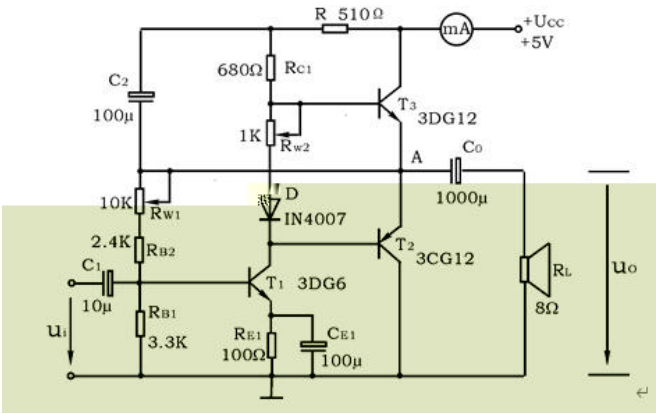
R 510Ω
mA
+Ucc
+5V
680Ω
Rc1
C2
100μ
T3
3DG12
1K
Rw2
A
Co
1000μ
10K
Rw1
D
IN4007
2.4K
RB2
T2
3CG12
C1
10μ
T1 3DG6
RL
8Ω
uo
ui
RB1
3.3K
RE1
100Ω
CE1
100μ

= −

$=U_{cc\ dc}$

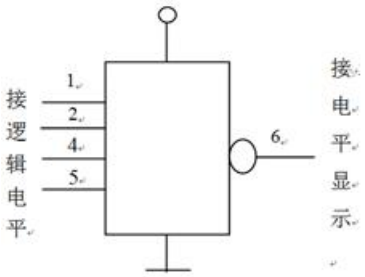

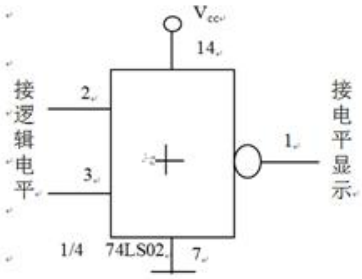

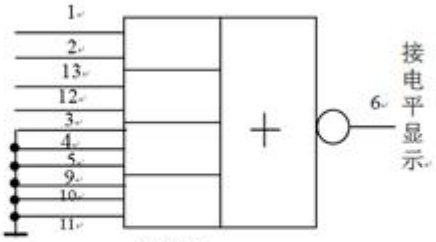

74LS54

1、2、12、13：接逻辑电平

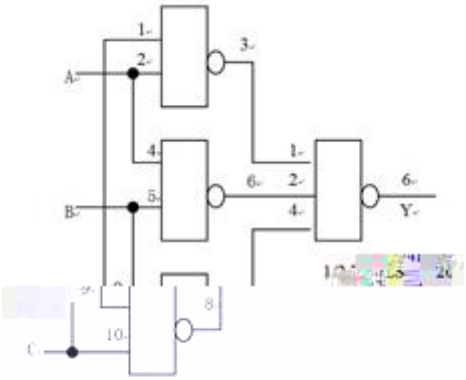

3-4 74LS00

A、B、C：接逻辑电平

Y：接电平显示

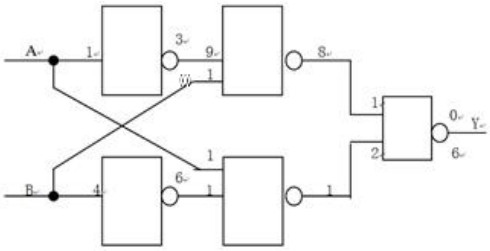

A、B：接逻辑电子

Y：　接电平显示

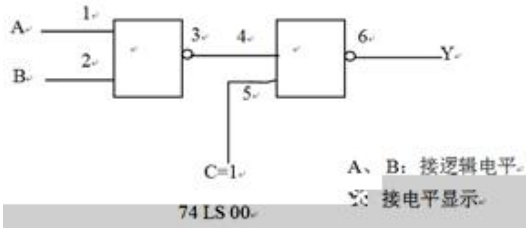
A
B
1
2
3
4
5
6
Y
C=1
A、B：接逻辑电平
Y：接电平显示
74 LS 00

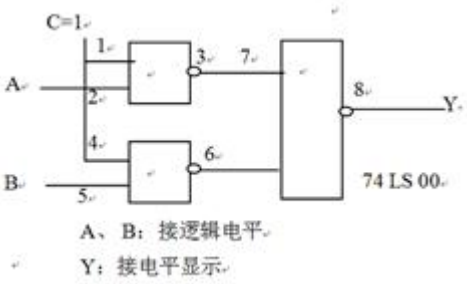
C=1
A
B
1
2
3
4
5
6
7
8
Y
74 LS 00
A、B：接逻辑电平
Y：接电平显示

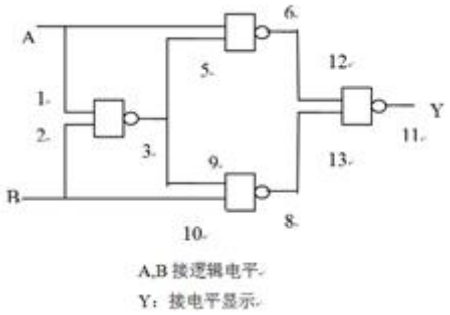
A
B
1
2
3
5
6
8
9
10
11
12
13
Y
A,B 接逻辑电平
Y：接电平显示

2020

			200801004		
	I d c i f Ph ic				1
			16		1

1	
2	
3	
4	
5	

	1.1	1	M
	3.1	2	H
	3.3	3	M
	7.1	4	M

	7.2	5	M

		1. 2.		1 2 3 4 5	2
		1. 2.		1 2 3 4 5	2
				16	

1.
2.

1.
2.

1.
2.

1.
2.

1.
2.

1.
2.

1	1. 2.	
2	1. 2.	
3	1. 2.	
4	1. 2.	
5	1. 2.	

50% 50%

	50%	**50%**	
1	10%	10%	
2	40%	25%	
3	20%	20%	
4	15%	25%	
5	15%	20%	

. . 2016.

1. . . 2011.
2. . . 2010.

1. ,
h :// h .fa a.cha i g.c / al
2. MOOC,
h :// .ic e163. g/ c/c e/QDU-1003511001
3. MOOC,
h :// .ic e163. g/c e/JLU-1001633003

1.

2.

3.

4.

[redacted]

	90-100	**80-89**	**70-79**	**60-69**	**0-59**
1					
2					

[redacted]

207

2020

200801006

The 1

	7.2[ ]	3	M
	8.3[ ]	4	M

				1 2 3 4	14
			1. 2.	1 2 3 4	12
			1 2.	1 2 3 4	12

		-	1. 2. 3.	1 2 3 4	12
			1. 2.	1 2 3 4	6

			1. 2.	1 2 3 4	8
				64	

1.
2.

1.
2.
3.
4.

1.
2.
3.

1.
2.
3.
4.

1.
2.
3.

1.

2. $\Gamma \approx \quad {}^{-}/6$

3.

4.

5. $=$

1.

2.

3.

4.

5.

1

2

3

4

5

1

2

1.

2.

3.

4.

5.

1.

2.

1.

2.

3.

4.

5.

1.
2.
3.
4.

1.
2.
3.

1.
2.
3.
4.
5.
6.
7.

1.
2.

1
2
3
4

1
2
3

1.
2.
3.

1.

2. $^{2} = 2$

1.
2.
3.

1.
2.
3.

1.
2.
3.
4.

1.
2.

1.
2.
3.

1.
2.

1
2.

1
2
3
4
5
6

1
2
3
4

1.
2.
3.

1.
2.

3.
4.

1.
2.

1.
2.
3.

1.
2.
3.
4.
5.
6.

1.
2.
3.

1.
2.
3.
4.

1.

2.
3.

1
2
3
4
5

1
2
3

1.
2.
3.
4.

1.
2.
3.

1.
2.
3.
4.
5.
6.
7.
8.

1.
2.

1
2
3

1
2

1.
2.

1.
2.

1.
2.
3.

1.
2.
3.
4.
5.

1.
2.
3.

1.
2.

1
2
3
4

1
2
3

1		
2	2.	
3	2.	

4	1. 2. 3. 4.	

10% 15% 10%
10% 55%

	10%	**15%**	**10%**	**10%**	**55%**	
1	30%	30%	70%		40%	=[0.1 (/)+0.15 / +0.1 / +0.1 / +0.55 /]
2	30%	50%	10%		60%	
3	20%	10%	10%	40%		
4	20%	10%	10%	60%		

***** **50**

2018.

1. 1998.
2. 1979.
3. 1994.
4. 1989.
5. . 2010.
6. . 2008.

1. h ://c1.cha i g.c /c e/208280087.h l
2. h ://. e i li e.c /de ail/205759146
3. MOOC( )_ h ://.ic e163. g/
4.

	90-100	**80-89**	**70-79**	**60-69**	**0-59**
1					
2					
3					
4					

	80	70	60	50	50

2020

			200801007		
	Elec ag e ic				2
			80		5

1	
2	
3 4	

31[ ]

3.

7.	7.2[ ]	2 3	M
8.	8.3[ ]	4	M

				1 2 3	12
				1 2 3	12
				1 2 3 4	8
				1 2 3 4	10

-	1 2 3 4	12

	1 2 3 4	12

12

1
2
3

8

1 P
2
3 **E P D** **D**

10

1
2
3
4

12

-

1
2
3

4 B

-

-

12

1 B M H
2
3

14

1
2
3 L

4 C
5

1	1. 2.	1. 2. 3.
2	1. 2.	1. 2. 3.
3	1. 2.	1.

4	1. 2.	1.

	10%	**20%**	**70%**	
1	20%	50%	50%	[0.1 = / +0.2 / +0.7 /]
2	20%	50%	50%	
3	30%			
4	30%			

***** **50**

1 . . ,2019 .
2 . . ,2011 .

1 . . ,2003 .
2 . . ,2001 .
3 . ,2012 .
4 . . ,2003 .

1.
2.
3. MOOC( )_

1.
MOOC
2.

3.

4.

	90-100	**80-89**	**70-79**	**60-69**	**0-59**
1.					

2020

			-	3 4 5	
				2 3 5	2
		--		1 2 3 5	4
				1 2 3	3
				64	

1.
2.
3.
4.

1.
2.
3.
4.
5.

1.
2.
3.

1.
2.
3.

1.
2.

1
2

1
2

1.
2.

3.
4.
5.
( )
1.
2.

1.
2.
*
1.
2.
3.
)
1.
2.
)
1.
2.

1.
2.
3.

1.
2.

1
2
3

1.
2.

1.

2.
3.
4.
5.
6.

1.
2.
3.
4.

1.
2.
3.
4.
5.
6.
7.

1.
2.
3.

1
2 -

1.
2.

1.
2.

1.
2.

1.
2.
3.

1.
2.
3.
4.

1.
2.

1
2

1.
2.

1.
2.
3.

1.
2.
3.O e

1. e
2.

1.
2.

1.
2.
3.

1.
2.

1669

-

1
2

1
2

1
2

1
2

1	1. 2.	
2	1. 2. 3. 4. 1/4 1/2 5.	
3	1. 2. 3. 4. 5. 6.	

	7.	
4	1. 2. 3. 4. 5.	
5	1. 2. 3. 4.	

25% 15% 10% 50%

	25%	**15%**	**10%**	**50%**	
1	20%				= [0.25 (/)+0.15 / +0.1 / +0.5 /]
2	10%		100%	40%	
3	30%			20%	
4		100%		40%	
5	40%				

* **50**

. . 2019.

1. . . 2018.
2. . . 2008.

3. . . 2018.
4. . . 2004.

1. -
h ://c1.cha i g.c /c e/206923633.h l
2. MOOC( )- -
h ://.ic e163. g/lea /SYSU-1002330011? id=1002447013#/lea /a ce
3. MOOC( )- -
h ://.ic e163. g/lea /ECNU-449001? id=1002199008#/lea /a ce

1.
MOOC
2.

3.

4.

	90-100	**80-89**	**70-79**	**60-69**	**0-59**
1					
2					
3					

4					
5					

2020

		$\beta \quad Y$			

		α			

2020

			200801017		
	Me h d f Ma he a ical Ph ic				3
			64		4

1	
2	
3	

	3.1[ ]	1	H
	7.1[ ]	2	M
	8.3[ ]	3	M

				1	6

				2 3	
				1 2 3	8
				1 2 3	9
				1 2 3	1
				1 2 3	6

				1 2 3	4
				1 2 3	4
				1 2 3	6
				1 2 3	6
		del a		1 2 3	4
				1	4

				2 3	
				1 2 3	4
				1 2 3	2
			64		

1.
2.
3.

1.
2.
3.

1.
2.
3.

1.
2.

1.

2.
3.
4.
5.

1.
2.
3.
4.

1
2

1.
2.

1.
2.
3.

1.
2.
3.

1.
2.
3.

1.
2.
3.

1
2

1
2

1.
2.

1.
2.
3.

1.
2.
3.

1.
2.
3.

1.
2.
3.
1\ 9
1.
2.
3.
4.
5.

1.
2.
3.
4.

1.
2.
3.

1.
2.
3.

1
2

1
2

del a

1.del a
2.del a
3. del a

1.
2.
3.

1.
2.
3.
4.
5.

1.
2.
3.
4.
5.
6.

1.
2.

1
2

1
2
-

1.
2
3.

1		
2		
3		

	20%	**20%**	**60%**	
1	——	**100%**	**100%**	= [0.2 (/)+0.2 / +0.6 /]
2	**50%**	——	——	
3	**50%**	——	——	

***** **50**

(4) 2010

1. 2003
2. 2013

1.
h :// . .c / / age/ 0366 bh95 .h l
2.
h ://i ha e.ia k. i a.c .c /f/8AK 4 De3S.h l

1.

2.

3.

4.

	90-100	**80-89**	**70-79**	**60-69**	**0-59**
1					
2					
3					

2020

			200801022		
	Elec d a ic				6
			48		3

1	
2	
3	
4	

	3.1[ ]	1	M
	3.3[ ]	2	H
	7.1[ ]	3	M
	8.3[ ]	4	M

				1 4	2
				1 2 3 4	6
				1 2 3 4	10
		A B		1 2 3 4	6
				1 2 3 4	10

1.
2.
3.

1.
2.
3.
4.
5.

1.
2.
3.
4.

1.
2.
3.
4.

1.
2.

1.
2.
3.

1
2

1
2

1.
2.
3.

1.
2.

1.
2.
3.

1.
2.

3.

1
2

1
2

1.
2.
3.
4.

1.
2.
3.
AB

1
2

1
2

1.
2.
3.
4.

1.
2.
3.

1.
2.
3.
4.

1.
2.
3.

1.

2.
3.
4.TE_{10}

1
2

1
2

1.
2.
3.

1.
2.
3.
4.
5.

1.
2.
3.

1
2

1
2

1.
2.

1.
2.
3.

1.

2.
3.
4.
5.
6.

1.
2.
3.
4.
5.

1.
2.
3.
4.

1.
2.
3.
4.

1
2

1
2

1		
2		
3		
4		

	20%	**20%**	**60%**	
1	——	**40%**	**40%**	=

	90-100	**80-89**	**70-79**	**60-69**	**0-59**
1					
2					
3					

4					

2020

			200801018		
	The e ical Mecha ic				4
			48		3

1 ,	
2	
3	

				1 2 3	14
				1 2	6
				1 2	14
				1 2	6
				1 2 3	8
				48	

1.
2.

1.
2.
3.

1.
2.
3.

1.
2.

1.
2.

1.
2.
3.
4.

1.
2.
3.
4.
5.

1.
2.
3.
4.

1
2
3
4

1
2
3

1.
2.

1.
2.
3.

1.
2.
3.

1.
2.
3.
4.

1.
2.

1
2
3

1.
2.

1.
2.

1.
2.

1.
2.
3.

1.
2.

1.

2.
3.
4.

1.
2.
3.

1
2
3

1
2

1.
2.
3.
4.

1
2

1.
2.

1.
2.
3.

1.
2.

1
2
3

1	1. 2. 3. 4. 5. 6. 7. 8. 9.	
2	1. 2. 3. 4. 5. 6.	
3		

	20%	**30%**	**50%**
1	40%	60%	50%

1.
2.
3.

4.

	90-100	**80-89**	**70-79**	**60-69**	**0-59**
1					
2					
3					

2020

			200801019		
	The d a ic a d S a i ical Ph ic				4
			48		3

1	
2	
3	
4	
5	

	3.1[ ]	2	M
	3.3[ ]	3	H
	7.1[ ]	1 4	M

	8.3[ ]	5	M

•¢²ypÓ€bº((..1×(Ë –,´

3
4
5

2
3
4
5

0

5 0

%Yr:

1.
2.
3.

1.
2.
3.
4.

1
2
3

1
2

1.
2.

1.
2.

1.
2.
3.
4.

1
2

1
2

1.
2.
3.

1.
2.
3.

1.

1.
2.
3.

1.

2.

1
2

3

1
2

1.
2.
3.
4.

1.
2.
3.
4.

1.
2.
3.
4.
5.

1.
2.

1
2

1
2

-

1.
2.
3.
4.

1
2

1
2

1.
2.
3.

1
2

H

1	1. 2.	
2	1. 2.	
3	1. 2.	
4	1. 2.	
5	1. 2.	

	10%	**10%**	**20%**	**10%**	**50%**	
1	100%					= [0.1 (/)+0.1 / +0.2
2			50%	50%	50%	

/ +0.1
3 50% 50% 50% /
+0.5 /
4]

	90-100	80-89	70-79	60-69	0-59
1					
2					
3					

k f @ÕàPNÈÈ

4.					
5					

2020

			200801020		
	Q a Mecha ic				5
			72		4.5

1	
2	
3	
4	

	3.1[ ]	1	H
	3.3[ ]	2	H
	7.1[ ]	3	M
	8.3[ ]	4	M

			1. 2.	1 2 3	4
				1 2 3 4	14

1
2
3
4

12

1
2
3

4

*

-

1
2
3
4

				72	

1.
2.
3.
4.

1.
2.

1.
2.

1
2

1.
2.
3.

1.
2.
3.

1.
2.

1.
2.

1.
2.

1.
2.

1.
2.
3.

1
2

1
2

1.
2.
3.

1.
2.

1.
2.

1.
2.

1.
2.
3.
4.

1
2
3

1
2

1.
2.
3.

1.
2.

1.
2.
3.

1.
2.

1.
2.
3.

1
2
3

1
2

1.
2.
3.

1.
2.

1

2

1
2
3
*

1
2

1.
2.

1.
2.
3.
4.
5.

1.
2.

1.
2.
3.

1.
2.N
3.

1
2

1
2

1	1. 2.	
2	1. 2. 3.	
3		
4		

20% **20%**

h :// . e a g .c /c e/THU07021000340

4. h :// .c ki. e

1.
MOOC
2.
3.
4.

	90-100	**80-89**	**70-79**	**60-69**	**0-59**
1					
2					
3					
4					

I 2020

			20080110		
	Ge e al Ph ic E e i e 1				1
			32		1

1	
2	
3	

1.

2.

3

1.

1

2

2.

	1. 2.	3			1. 2. 3.	1 2 3
	1. 2. 3.	3			1. 2.	1 2 3
	1. 2. 3.	3			1. 2.	1 2 3
	1. 2.	3			1. 2. 3.	1 2 3
	1. 2.	3			1. 2.	1 2 3

					3.	
	1. 2. 3.	3			1. 2.	1 2 3
	1. 2. R	3			1. 2.	1 2 3
					32	

:

1.
2.
3. D_1 D_2 H_1
4. D 5

:

( )

:

1.
2.

1.
2. $tg\frac{\beta}{2}tg\frac{\gamma}{2} > tg\alpha$

DH0308

1.
2.

：

1

2

3

4

：

：

1.

2.

1

2

1.

2.

：

1.

2.

3.

：

5g 5g 4

25g 4

：

1.

2.

3.

：

1 1 g

2 g

：

DHTC-1A

：

1.

2.

3.

:

1
2
3
4
5

1.
2.

1
2
3
4
5

1.
2.

:

1.
2. $_1 > \ _2 \quad _{20}=0 \quad _{1\ 10} = \ _{1\ 1} + \ _{2\ 2}$ P.1.1 P.2.1 P.2.2

3. $_1 > \ _2 \quad _{20}=0 \quad _{1\ 10} = (\ _{1} + \ _{2})$ P.1.1 P.2.1

4.

:

:

1.
2.
3.

1. $_2 = 2 \ _1$

2. A B g k

DHTC-1A

1.
2.
3.

：

1 20

2

3

AD590

1.

2.

1

2 R

3

Z-1A

1.

2.

1	1. 2.	
2	1. 2. 3. 4.	
3	1. 2.	

20% 50% 30%

	20%	**50%**	**30%**	
1	60%	30%	30%	= [0.2 (/

2	20%	40%	40%	)+0.5 /)+0.3 /]
3	20%	30%	30%	

1. . (5) 2016.

1. . (1) 2017.
2. . . 2005.
3. . . 2005.
4. . . 2009.

1. MOOC( )
h :// .ic e163. g/c e/ZSTU-1206299818?f = ea chPage
2. MOOC( )
h :// .ic e163. g/c e/NUDT-1001673004?f = ea chPage

1.
MOOC
2.

3.

	90-100	**80-89**	**70-79**	**60-69**	**0-59**
1					
2					

3					

II 2020

			200801011		
	Ge e al Ph ic E e i e 2				2
			32		1

1	
2 " " " "	
3	

	3.2[ ]	1 2 3	H
	7.2[ ]	1 2 3	M
	8.3[ ]	3	M

	1.	3			1.	1 2

	2.				2.	3
	1. 2.	3			1. 2. 3.	1 2 3
	1.	2			1. 2.	1 2 3
	1. 2.	3			1. 2.	1 2 3
	1. 2. - 3.	3			1. 2.	1 2 3
	1.	3			1.	1

2. g

2.

	1. 2.	3			1. 2.	1 2 3
	1. AD590 2.	2			1. 2.	1 2 3
					32	

1

2 150 6.7 V

$(\frac{\Delta\theta}{\Delta})_{\theta=100}$ 6

3

$$_2 = {}_1 \frac{{}_1 \Delta \quad {}_2}{{}_2 (\Delta \ )_1}$$

DH4603

:

1.

2.

1 2 3 0 10 15 1 i 0 20

2 1 θ 0 20

3 1 (- 0) (2) (1)

' "

4 1 (- 0)

DH-YBQR

1.
2.
3.

1
2 150
3
4 30
5

THQRH-1

1.
2.

1
2
3
4

1.
2.

1
2
3

:

1.
2.

1
2
/ 6
3

$_0 = \ / \sqrt{2}$

/ 6
a $2\theta = \ /(\ - \ )$ a

DH4609

:

1. g
2.

:

1
2
3
4
5

:

1.
2.

1
2 1
3 2 3
4

1.
2.

1
2

U1 U2
U U1-U2

DH4607

：

1.
2.
3.

1
2
3

3

DH4609

1.
2.

1
2
3

：

1.
2.

1 AD590
2
3

AD590

：

1.
2.

1	1.	

	2. 3.	
2	1. 2. " " 3.	
3	1. 2.	

20% 50% 30%

	20%	**50%**	**30%**	
1	60%	30%	30%	= [0.2 (/)+0.5 /)+0.3 /]
2	20%	40%	40%	
3	20%	30%	30%	

1. . (5) 2016.

1. . (1) 2017.
2. . . 2005.
3. . . 2005.
4. . . 2009.

1. h :// c1.cha i g.c /
2. MOOC( )- h :// .ic e163. g/
3. h :// .c ki. e

1.
MOOC
2.

3.

	90-100	**80-89**	**70-79**	**60-69**	**0-59**
1					
2					

3					

2020

1.

1.

2.

3

2.

1
2
3
4

3.

3.

1.

1.

2.

3

2.

1
2
3
4

3.

1.

2.

3

3.

	3.				2.	
	1. 2. 3.	3			1. 2. 3.	1 2 3 4
	1. 2.	2			1. 2. 3.	1 2 3 4
	1. 2.	3			1. 2.	1 2 3 4

	B B Hc 3.				3.	
LRC	1. RLC 2. 3. Q	3			1. RLC 2. 3.	1 2 3 4
	1. 2. 3.	3			1. 2.	1 2 3 4

	1. 2. 3.	2			1. 2.	1 2 3 4
	1. 2.	3			1. 2.	1 2 3 4
	1. 2. 3. 4.	3			1. 2.	1 2 3 4

					32	

:

1

2

:

:

1.

2.

3.

:

1

2

:

1.

2.

3.

1 10 100Ω 2%

2

3

0.5 A 20A 0.5 60 V 600V 0.5

:

1.
2.

1
2

1.
2.

1 Y
2
3

SB-10

:
1.
2.
3.

1 Δ

2 2 4

3 Δ

4

:
1.
2.
3.

1
2 C 12

:

1.
2.
3.

LRC

1 RLC
2 RLC
3 Q

:

1. RLC
2.

3.

1 I_H U_H
2 K_H
3
4

1.
2.

1 100Ω
2
3

4

1.

2.

0

1 5 A 50 A
2 5V 50V
3 10V 50V
4 1kΩ 1Ω

50μA 100μA

1.

2.

1
2

1.

2.

	1. 2.	

1	2. 3.	
2	1. 2. 3. 4.	
3	1. 2. 3. 4.	

20% 50% 30%

	20%	50%	30%	
1		10%	10%	= [0.2 (/)+0.5 /) +0.3 /]
2	40%	30%	40%	
3	40%	40%	40%	
4	20%	20%	10%	

1. . (5) 2016.

1. . (1) 2017.
2. . . 2005.
3. . . 2005.
4. . . 2009.

1. MOOC( )
h ://.ic e163. g/c de/ZSTU-1206299818?f = ea chPage
2. MOOC(

2.

3.

	90-100	**80-89**	**70-79**	**60-69**	**0-59**
1					
2					
3					

4					

2020

	1. 2.	3			1.	1 2 3
	1. 2.	3			1. 2.	1 2 3 4
I	1. 2.	3				1 2 3
	1. 2.	2			1. 2.	1 2 3
	1. 2.	3				1 2 3 4
	1. 2.	3				1 2 3 4
	1.	3				2 3

2. 4

1. 2
2. 2 3
4

1. 1
2
2
2. 3
II
4

1. LED

5

:

1.
2.

:

1
2

:

1.
2.

I

1
2

:

1
2
3
4
6

:

1.
2.

1
2
3

2

1.
2.

1
2

1.
2.

1
2
3

1
2

1
2

1 LED
2

LED

1
2
3 D
4
5

1
2

1	1 2	
2	1 2.	
3	1 2 3	
4	1 2 3	

20% 50% 30%

	20%	**50%**	**30%**	
1	10%	10%	10%	[0.2 (/)+0.5 /)+0.3 /] =
2	40%	30%	40%	
3	40%	40%	40%	
4	10%	20%	10%	

1. . (5) 2016.

1. . (1) 2017.
2.. . . 2005.
3.. . . 2005.
4.. . . 2009.

1. MOOC( )
h :// .ic e163. g/c e/ZSTU-1206299818?f = ea chPage
2. MOOC( )
h :// .ic e163. g/c e/NUDT-1001673004?f = ea chPage

1.
MOOC
2.

3.

	90-100	**80-89**	**70-79**	**60-69**	**0-59**
1					

2					
3					
4					

2020

			200801016		
	The i				8
			16		4

1	
2	
3	
4	
5	

3.	3.1[ ]	1	H
	3.2[ ]	2	M
	3.3[ ]	3	H

4.	4.3[ ]	2	H
7.	7.2[ ]	4	H
8.	8.3[ ]	5	M

		1. 2.		1 2 3 4 5	2
		1. 2. 3.		1 2 3 4 5	2
		1. 2. 3.		1 2 3 4 5	8
		1. 2.		1 2 3 4 5	3
				1 2 3 4 5	1
				16	

1
2
3

1
2

1
2
3

1
2

1
2
3

1
2

1
2

1
2

	50%	**20%**	**30%**
1	25%	20%	20%
2	25%	25%	15%
3			

=
[0.5 (/
)+0.2
/
+0.3 /

	90-100	**80-89**	**70-79**	**60-69**	**0-59**
1					
2					
3					

4					
5					

2020

			H
			M
			M

				1 2	2
				3	12
					18

				32	

1.
2.
3.
4.
5.

1.
2.
3.
4.
5.

				=
		20%		
		60%	100%	
		20%		

1. . . 2018.
2. . . 2019.

1					

2020

			200801036		
	Ph ic c ic l a d eachi g he f iddle ch l				4
			48		3

] – ‰

				2	
				2	
				2	
				2	
				2	

				2	
				4	
				4	
				4	
				4	
				4	
				4	
				1	

,

,

,

,

.

-
-

1	1. 2.	
2	1. 2.	
3	1. 2.	
4	2.	
5	2. 3.	

1	10%	10%			= [0.15 (/)+0.15 / +0.2 / +0.5 /]
2	40%	35%		60%	
3	20%	20%	30%	40%	
4	10%	10%	30%		

5	20%	25%	40%		

h :// dle. c .ed .c /c e, , .

h :// c1-1.cha i g.c /c eda a?cla Id=14811406&c eId=204225689& e=1& = &e c =78d9ddda278a945d3bfa60e2adb8d6b4&c i=8669851& e c=d0c9493be291f97d98ca1775858006fa,

, .

h :// .119ed .c .c /, .

h :// . eache .c .c / .

h :// .j g.ed .c / al/h e/i de .

h :// .jlj .c / .

h :// lj .ec .ed .c /

h :// . h g ca .c /

h :// . eache ed .c /

h :// .c 910.c /

h ://a .b .ed .c /a l/ l/i de .h l,VR/AR+ , .

h ://ed . had c ea .c / .

h :// . agicl ded .c / l l/ h /48.h l, .

14.h :// .ic e163. g/c e/SNNU-1206635809 , MOOC

15.h :// .ic e163. g/c e/ c -1207427803 , MOOC

1.

2.

MOOC

3.

4.

2020

Ã

2020

2020

			200801039		
	The k f head eache				5
			32		1

1	
2	
3	
4	
5	

	2.3[ ]	1	M
	5.1[ ]	2 4	H
	5.2[ ]	3 5	H
	5.3[ ]	3	H

	8.2[ ]	5	H

				1 2 4	5
				1 2	5
				1 2	5
				1 2	5
				1 2	5

				1 2	7
			32		

	10%	40%	50%	
1	100%	--	--	= [10%×(/)+40%× / +50%× /]
2	--	20%	20%	
3	--	30%	30%	
4	--	20%	20%	
5	--	30%	30%	

1. . . .2014
2. . . .2001
3. . . .2007

1. . . .2003
2. . . .2004
3. . . .2012
4. . . .2008
5. . . .2007

1. h :// c1.cha i g.c /

2. MOOC( )- h :// .ic e163. g/

1.

2.

	90-100	**80-89**	**70-79**	**60-69**	**0-59**
1					
2					
3					

4					
5					